Donaldson®
Torit®

Downflo® II Dust Collectors

POWERED BY
ULTRA-WEB®
High Efficiency Nanofiber Filters Built to Last

Donaldson

Downflo® II

Engineered for Reliable Performance

The longstanding, most influential cartridge collector in industrial air filtration history, the Donaldson® Torit® Downflo® II (DFT), delivers optimum performance and is one of the best values available in today's marketplace. A leader in the industry for over 20 years with thousands of successful installations in place, DFT dust collectors ensure steadfast, trouble-free operation.

The DFT advantages can be found in the collector's patented design and components. Now featuring a ledgeless design in combination with proprietary Ultra-Web® filter media and patented cleaning technology, the DFT continues its strong performance in traditional applications such as metalworking. It also generates interest and respect in process applications where ledgeless construction is often a requirement. Providing higher efficiency and smaller footprints than any baghouse collector or even other cartridge collectors, DFT adds up to long-term savings and improved performance in many applications.

A Leader in the Industry *for over* 20 *Years*

DFT Offers:

- **Ledgeless construction** Eliminates dust build-up and accommodates wash down environments.
- **Compact design** Minimizes floor space.
- **Powerful performance** Patented ExtraLife™ Filter Cleaning System provides 30% more cleaning energy.
- **Cost savings** Fewer filter changeouts, reduced filter disposal costs, less energy usage.
- **Reliability** Exceptional results for over 20 years and counting.
- **Easy system set up**
- **Easy maintenance**
- **10-year warranty**

DFT 3-6

Sizes & Operations

Normal Operation

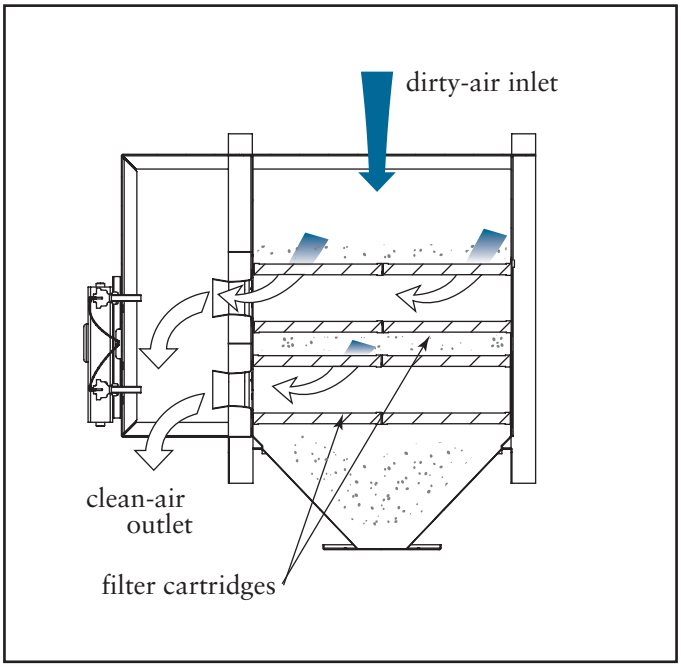

Pulse Cleaning Technology ExtraLife Filter Cleaning System uses proprietary, computer-modeled pulse cleaning technology to easily "pulse off" dust from the surface of the filter, improving filtration efficiency and prolonging filter life. The red lines in the illustration show the increased pressure at the front of the Downflo filter generated by the ExtraLife system. The blue line shows the pulse signature of a standard cartridge collector.

Downflo Pulse Pressure Gradients

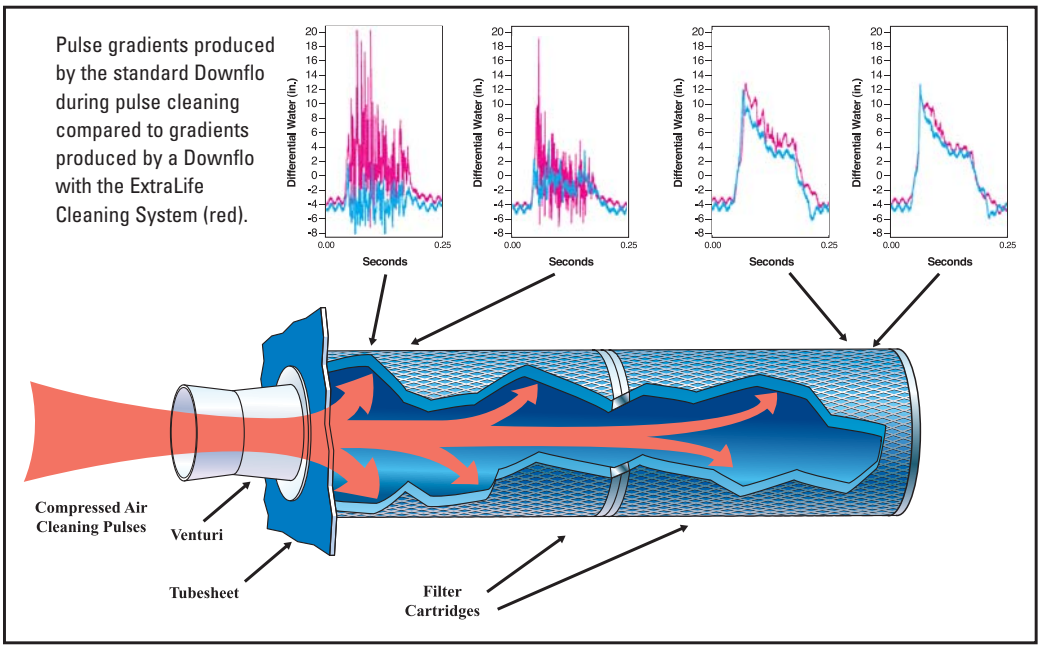

Downflo® II

Dimensions & Specifications

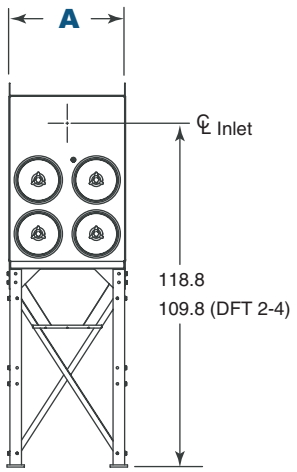

Front View
DFT 2-Models

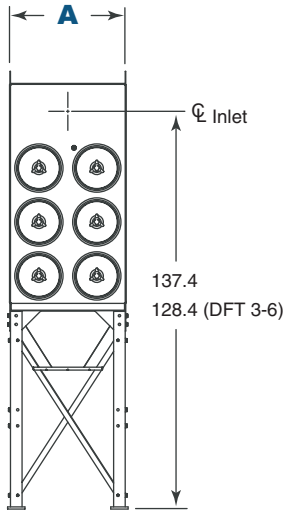

Front View
DFT 3-Models

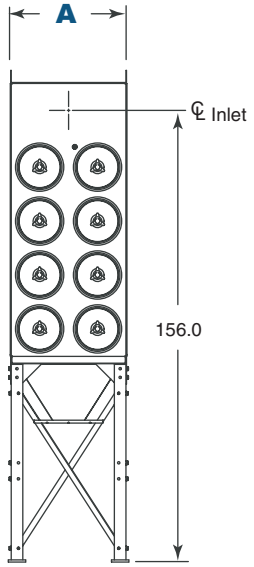

Front View
DFT 4-Models

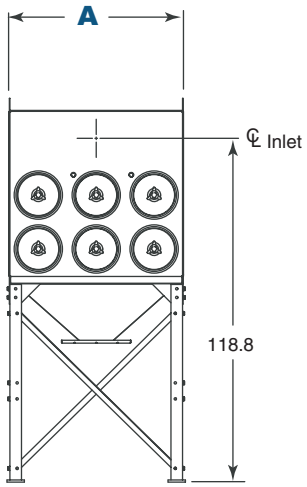

Front View
DFT 2-12
(3-Wide Models)

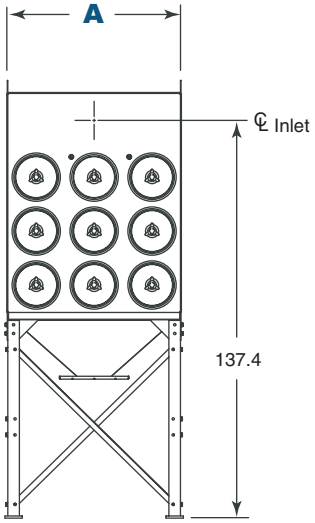

Front View
DFT 3-18
(3-Wide Models)

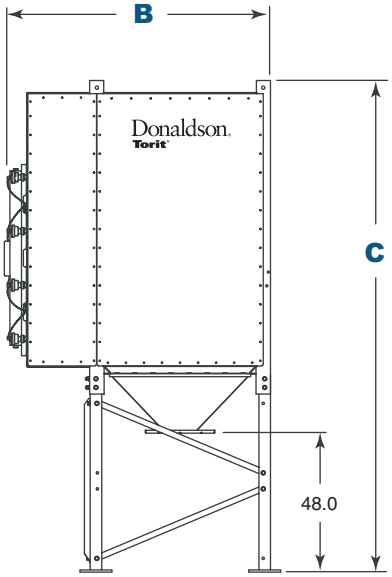

Left Side View
All Models

DFT Standard Operating Conditions			
Seismic Rating (zone)	4	Compressed Air Required (psig)	90-100
Wind Load Rating (mph)	100	Valves and controls	50/60 Khz
Housing Rating ("wg)	+15 / -20		

Downflo® II

Dimensions & Specifications

Model*	Nominal Airflow Range** (cfm)	No. of Filters	Ultra-Web Filter Area (ft^2)	No. of Valves	Shipping Weight (lbs)	Dimensions (inches) A	B	C
DFT 2 - 4	500-3,150	4	760	4	1,678	40.0	67.8	117.3
2 - 8	1,020-6,300	8	1,520	4	1,678	40.0	94.5	132.7
2 - 12	1,525-9,450	12	2,280	6	2,392	60.0	94.5	132.7
2 - 16	2,030-12,600	16	3,040	8	3,300	80.0	94.5	132.7
2 - 24	3,050-18,900	24	4,560	12	4,600	120.0	94.5	132.7
2 - 36	4,570-28,350	36	6,840	18	7,000	180.0	94.5	132.7
DFT 3 - 6	760-4,720	6	1,140	6	1,678	40.0	64.5	136.0
3 - 12	1,525-9,450	12	2,280	6	2,078	40.0	94.5	151.3
3 - 18	2,285-14,175	18	3,420	9	2,942	60.0	94.5	151.3
3 - 24	3,050-18,900	24	4,560	12	4,200	80.0	94.5	151.3
3 - 36	4,570-28,350	36	6,840	18	6,100	120.0	94.5	151.3
3 - 48	6,100-37,800	48	9,120	24	8,000	160.0	94.5	151.3
3 - 54	6,850-42,520	54	10,260	27	8,500	180.0	94.5	151.3
3 - 60	7,620-47,240	60	11,400	30	10,100	200.0	94.5	151.3
3 - 72	9,140-56,700	72	13,680	36	12,000	240.0	94.5	151.3
DFT 4 - 16	2,030-12,600	16	3,040	8	2,500	40.0	94.5	169.9
4 - 32	4,060-25,200	32	6,080	16	4,600	80.0	94.5	169.9
4 - 48	6,100-37,800	48	9,120	24	6,500	120.0	94.5	169.9
4 - 64	8,130-50,390	64	12,160	32	8,500	160.0	94.5	169.9
4 - 80	10,160-62,990	80	15,200	40	10,300	200.0	94.5	169.9
4 - 96	12,190-75,590	96	18,240	48	12,100	240.0	94.5	169.9
4 -112	14,220-88,190	112	21,280	56	14,500	280.0	94.5	169.9
4 -128	16,260-100,790	128	24,320	64	16,000	320.0	94.5	169.9

* The first number indicates number of filter rows, and the second number indicates number of cartridges.
** Based on clean filters.

Downflo® II

Cartridge Filter Technology

Ultra-Web® Nanofiber Filter Media The distinguishing factor in Donaldson Torit's cartridge filters is nanofiber filtration technology, which traps more dust on the surface of the filter than conventional depth loading types of filter media such as cellulose, polyester or cellulose/polyester blends. The resulting dust cake is easily cleaned off during the automated collector cleaning cycles providing cleaner air longer, with a minimum MERV* 13 efficiency rating based on ASHRAE 52.2 - 1999 test standards.

Nanofiber Media

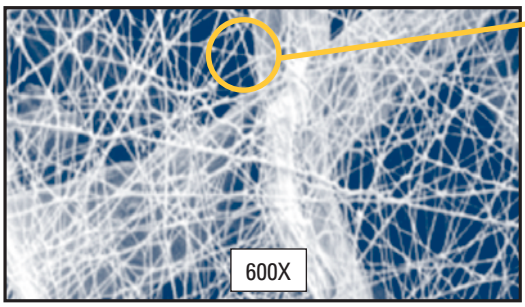

Nanofiber technology is available in all Ultra-Web and Fibra-Web filter cartridges.

10 micron

Commodity Filter Media

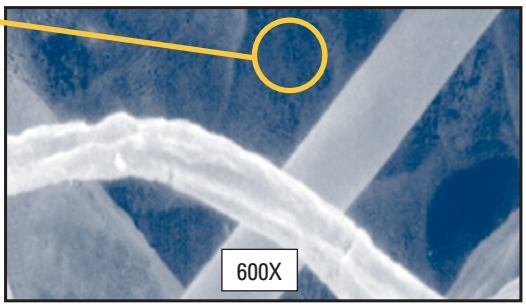

Conventional media has spaces of up to 60 microns between fibers, allowing dust to become deeply embedded thereby shortening filter life.

DFT Filter Media Pleats Shorter and stiffer filter pleats help minimize dust entrapment and simplify filter cleaning. A shorter pleat wall is less likely to collapse or bend, which can trap dust and prevent its release.

Downflo II Filter

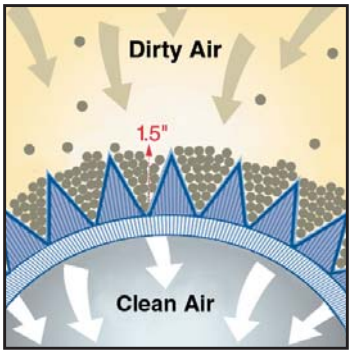

Standard Filter

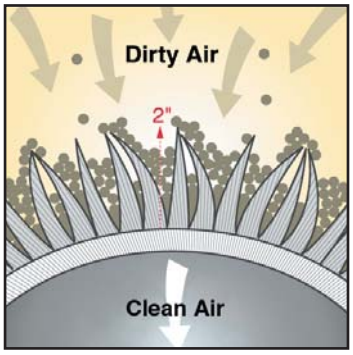

DFT Cartridge Filters DFT dust collectors' patented downward airflow design delivers highest filtration performance while using less energy. The DFT collector, its patented ExtraLife Filter Cleaning System, and Donaldson Torit's filter cartridges together are an unbeatable system. Choose from our superior line of filters to complete the most powerful dust collection solution available.

Downflo® II

Standard Features & Equipment Options

Collector Design	Standard	Optional
Mild Steel Construction	✗	
ExtraLife™ Filter Cleaning System	✗	
Inlets	✗	
Ledge-Free Hopper	✗	
Sprinkler Taps	✗	
Stainless Steel Construction		✗
High Temperature Construction		✗
Direct Drive Fans		✗
Chamber and Exhaust Silencers		✗
Abrasion Resistant (AR) Inlet		✗
Air Management Modules		✗
Extended Dirty Air Plenum		✗
Steep-Sided Hopper		✗
2-Mod Hopper		✗
Explosion Relief Vents		✗
Sprinkler Heads		✗
Service Platform (OSHA compliant)		✗
Damper Pack		✗
Drum Sentry™ Drum-Full Indicator		✗
Lined Clean Air Plenum		✗
Bag-Out Kit (Filter & Discharge)		✗
Bag-In/Bag-Out Kit (Filter & Discharge)		✗
Cartridge Filters		
Ultra-Web® (MERV* 13)	✗	
Ultra-Tek® (MERV 12) Thermo-Tek® (MERV 12) Fibra-Web® (MERV 14) Ultra-Web SB (MERV 15) Torit-Tex™ (MERV 16)		✗
HEPA/ASHRAE Afterfilters		✗

Paint System	Standard	Optional
Prime Coated Interior	✗	
Acrylic urethane finish over alkyd enamel primer. Paint system passes a 350-hr. salt spray test.	✗	
Custom Color		✗
Hostile Environment Coating		✗
Epoxy Coating		✗
Hopper Discharge		
Drum Cover and Hose		✗
Slide Gates		✗
Rotary Valves and Transitions		✗
Screw Conveyors		✗
Electrical Controls, Gauges and Enclosures		
Solid State Timer in NEMA 4 Enclosure	✗	
Magnehelic®** Gauge	✗	
Delta P Control, Delta P Plus Control		✗
Custom Panels		✗
Photohelic®** Gauge Standard & Weatherproof		✗
Basic Cold Climate Kit		✗
Heavy-Duty Cold Climate Kit		✗
Solenoid Enclosure (NEMA 7 & 9)		✗
Warranty		
10-Year Warranty	✗	

U.S. Patents 4,395,269; 5,562,746; 5,882,379.

* The **Minimum Efficiency Reporting Value** (MERV) of this filter cartridge has been determined through independent laboratory testing using ASHRAE 52.2 (1999) test standards. The MERV rating was determined at a face velocity of 118 feet per minute and loading up to four inches water gauge. Actual efficiency of any filter cartridge will vary according to the specific application parameters. Dust concentration, airflow, particle characteristics, and pulse cleaning methods all affect filtration efficiency.

** Magnehelic and Photohelic are registered trademarks of Dwyer Instruments, Inc.

Information contained in this document is subject to change without notice.

Visit us online at DustCollectionPros.com

Our Business is Improving Your Workplace Air Quality.

Since 1995, Environmental Solutions has been helping businesses, like yours, improve their workplace air quality. As an authorized service center for Donaldson Torit, we offer you a one-stop shop for equipment, service, engineering and installation of the industry's leading air pollution control systems.

Whether your company requires the removal of oil mist, welding fumes, machining or wood-working dust, graphite, or correction of any other type of air quality problem; we can expertly engineer and install a quality Donaldson Torit solution to meet your unique needs. No system is too big or too small.

TOLL FREE 1-866-438-7891

Environmental Solutions

12427 Fire Island Drive
Loves Park, IL 61111
Phone: (847) 370-9304

Environmental Solutions is also your source for discount pricing on genuine Donaldson Torit Replacement Filters!

DONALDSON TORIT SALES | INSTALLATION | REPLACEMENT FILTERS